THE DENVER AND RIO GRANDE WESTERN RAILROAD CO.

Flow Chart of

FREIGHT TRAIN SCHEDULES

(All times are Local Time)

Aug. 1, 1972
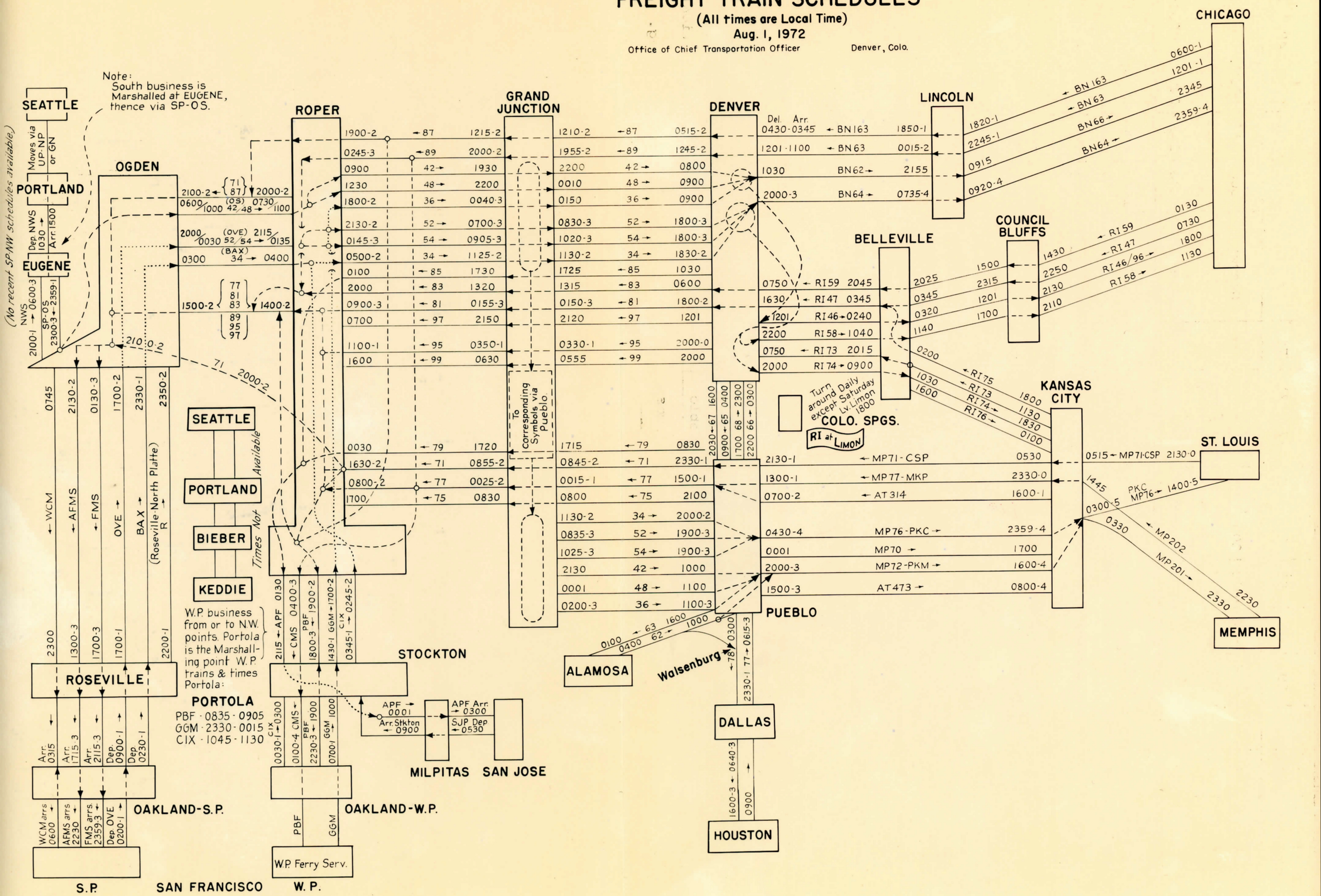
Office of Chief Transportation Officer Denver, Colo.